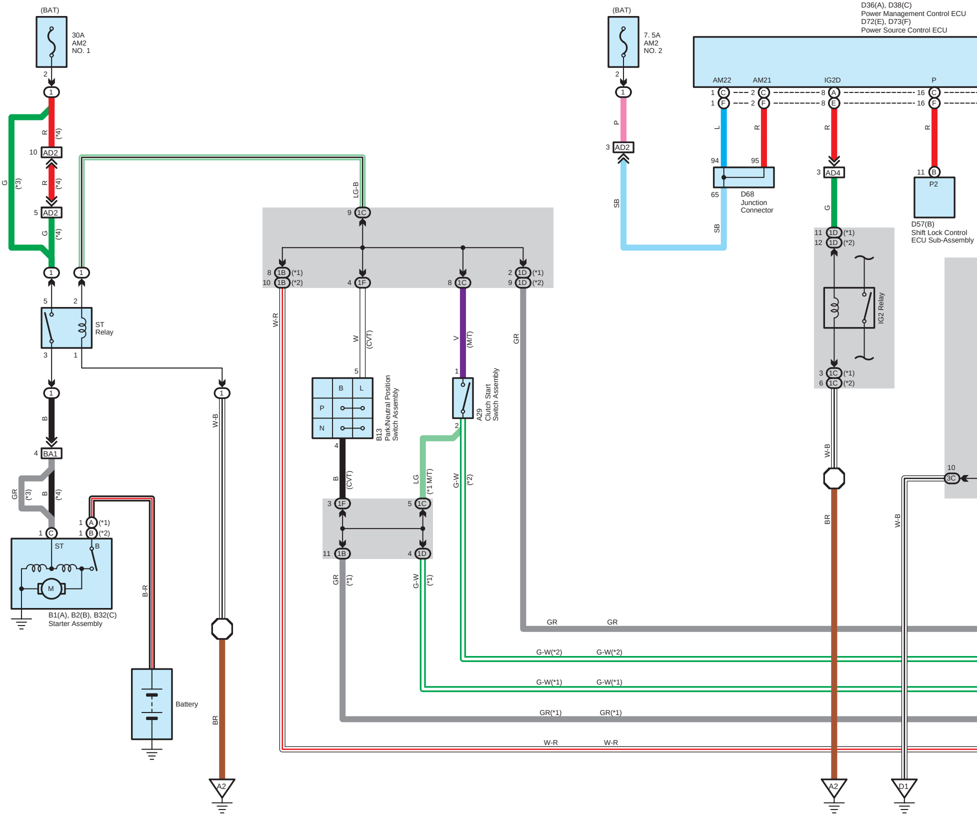
(BAT)
30A
AM2
NO. 1
2
1
R
(*4)
10
AD2
G
(*3)
R
(*4)
5
AD2
G
(*4)
1
1
5
2
ST
Relay
3
1
1
B
4
BA1
GR
(*3)
B
(*4)
1
C
ST
B
M
1
A
(*1)
1
B
(*2)
B1(A), B2(B), B32(C)
Starter Assembly
B-R
Battery
1
W-B
BR
A2
LG-B
9
1C
8
1B
(*1)
10
1B
(*2)
4
1F
8
1C
2
1D
(*1)
9
1D
(*2)
W-R
W
(CVT)
V
(M/T)
GR
5
B
L
P
N
4
B13
Park/Neutral Position
Switch Assembly
1
2
A29
Clutch Start
Switch Assembly
B
(CVT)
LG
(*1 M/T)
G-W
(*2)
3
1F
5
1C
11
1B
4
1D
GR
(*1)
G-W
(*1)
GR
GR
G-W(*2)
G-W(*2)
G-W(*1)
G-W(*1)
GR(*1)
GR(*1)
W-R
W-R
(BAT)
7. 5A
AM2
NO. 2
2
1
P
3
AD2
SB
D36(A), D38(C)
Power Management Control ECU
D72(E), D73(F)
Power Source Control ECU
AM22
AM21
IG2D
P
1
C
1
F
2
C
2
F
8
A
8
E
16
C
16
F
L
R
R
R
94
95
65
D68
Junction
Connector
SB
3
AD4
11
B
P2
D57(B)
Shift Lock Control
ECU Sub-Assembly
G
11
1D
(*1)
12
1D
(*2)
IG2 Relay
3
1C
(*1)
6
1C
(*2)
W-B
BR
A2
10
3C
W-B
D1

D36(A), D38(C)
Power Management Control ECU
D72(E), D73(F)
Power Source Control ECU

* 1 : Gasoline
* 2 : Diesel
* 3 : w/ Stop & Start System
* 4 : w/o Stop & Start System

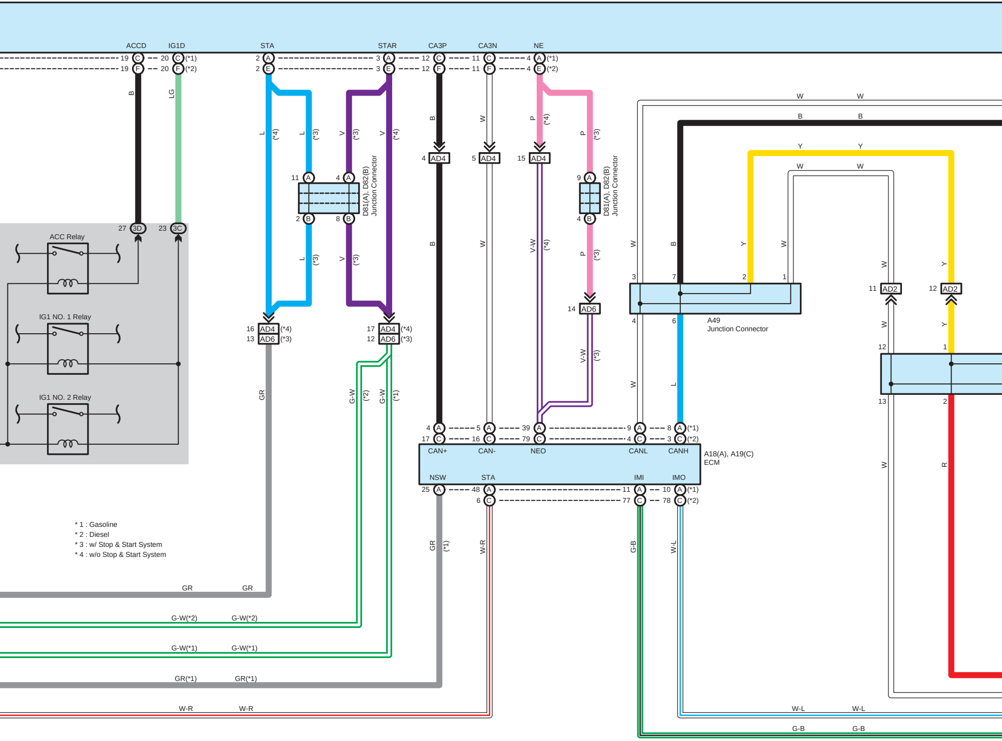
ACCD
IG1D
STA
STAR
CA3P
CA3N
NE
19 C
20 C (*1)
19 F
20 F (*2)
2 A
2 E
3 A
3 E
12 C
12 F
11 C
11 F
4 A (*1)
4 E (*2)
B
LG
L (*4)
L (*3)
V (*3)
V (*4)
B
W
P (*4)
P (*3)
11 A
4 A
2 B
8 B
D81(A), D82(B)
Junction Connector
4 AD4
5 AD4
15 AD4
9 A
4 B
14 AD6
27 3D
23 3C
ACC Relay
IG1 NO. 1 Relay
IG1 NO. 2 Relay
16 AD4 (*4)
13 AD6 (*3)
17 AD4 (*4)
12 AD6 (*3)
GR
G-W (*2)
G-W (*1)
V-W (*4)
V-W (*3)
W
W
B
B
Y
Y
W
W
3
7
2
1
4
6
A49
Junction Connector
L
11 AD2
12 AD2
W
Y
12
1
13
2
R
4 A
17 C
5 A
16 C
39 A
79 C
9 A
4 C
8 A (*1)
3 C (*2)
CAN+
CAN-
NEO
CANL
CANH
A18(A), A19(C)
ECM
NSW
STA
IMI
IMO
25 A
48 A
6 C
11 A
77 C
10 A (*1)
78 C (*2)
GR (*1)
W-R
G-B
W-L
GR
GR
G-W(*2)
G-W(*2)
G-W(*1)
G-W(*1)
GR(*1)
GR(*1)
W-R
W-R
W-L
W-L
G-B
G-B

* 1 : Gasoline
* 2 : Diesel
* 3 : w/ Stop & Start System
* 4 : w/o Stop & Start System

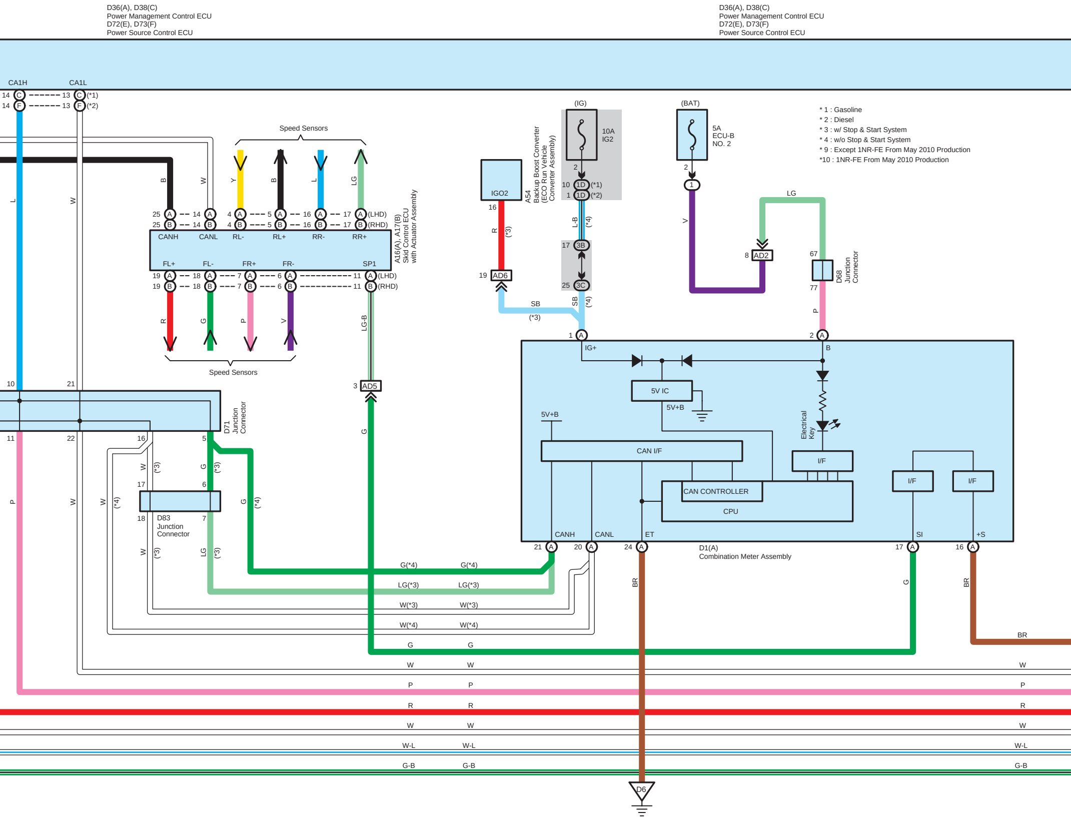

D36(A), D38(C)
Power Management Control ECU
D72(E), D73(F)
Power Source Control ECU
D36(A), D38(C)
Power Management Control ECU
D72(E), D73(F)
Power Source Control ECU
CA1H
CA1L
14 C 13 C (*1)
14 F 13 F (*2)
Speed Sensors
B
W
Y
B
L
LG
L
W
25 A 14 A 4 A 5 A 16 A 17 A (LHD)
25 B 14 B 4 B 5 B 16 B 17 B (RHD)
CANH
CANL
RL-
RL+
RR-
RR+
FL+
FL-
FR+
FR-
SP1
19 A 18 A 7 A 6 A 11 A (LHD)
19 B 18 B 7 B 6 B 11 B (RHD)
A16(A), A17(B)
Skid Control ECU
with Actuator Assembly
R
G
P
V
LG-B
Speed Sensors
10
21
11
22
16
5
D71
Junction
Connector
3 AD5
G
W (*3)
G (*3)
W
W (*4)
G (*4)
17
6
18
7
D83
Junction
Connector
W (*3)
LG (*3)
P
W
G(*4)
G(*4)
LG(*3)
LG(*3)
W(*3)
W(*3)
W(*4)
W(*4)
G
G
W
W
P
P
R
R
W
W
W-L
W-L
G-B
G-B
IGO2
16
R (*3)
19 AD6
SB
(*3)
A54
Backup Boost Converter
(ECO Run Vehicle
Converter Assembly)
(IG)
10A
IG2
2
10 1D (*1)
1 1D (*2)
L-B (*4)
17 3B
25 3C
SB (*4)
(BAT)
5A
ECU-B
NO. 2
2
1
V
LG
8 AD2
67
77
D68
Junction
Connector
P
1 A
2 A
IG+
B
5V IC
5V+B
5V+B
Electrical
Key
CAN I/F
I/F
CAN CONTROLLER
CPU
I/F
I/F
CANH
CANL
ET
SI
+S
21 A
20 A
24 A
17 A
16 A
D1(A)
Combination Meter Assembly
BR
G
BR
BR
W
P
R
W
W-L
G-B
D6

* 1 : Gasoline
* 2 : Diesel
* 3 : w/ Stop & Start System
* 4 : w/o Stop & Start System
* 9 : Except 1NR-FE From May 2010 Production
*10 : 1NR-FE From May 2010 Production

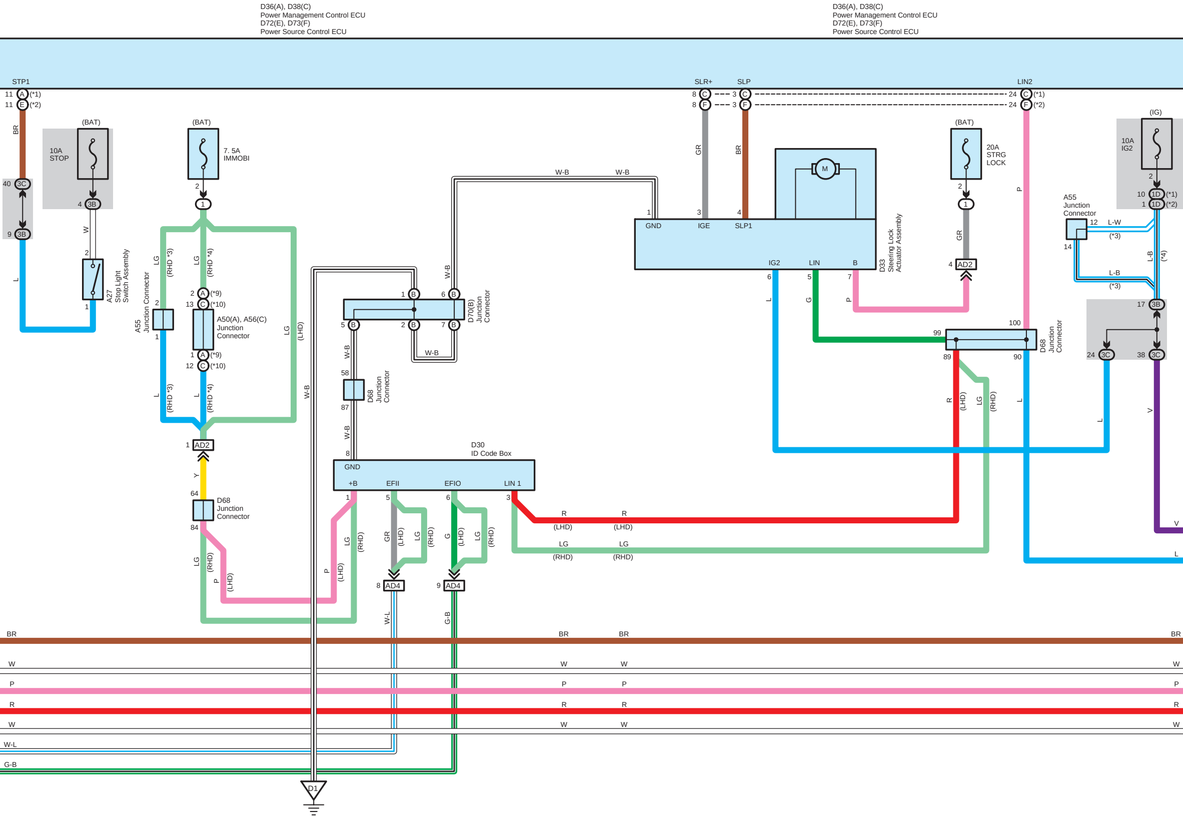
D36(A), D38(C)
Power Management Control ECU
D72(E), D73(F)
Power Source Control ECU
D36(A), D38(C)
Power Management Control ECU
D72(E), D73(F)
Power Source Control ECU
STP1
SLR+
SLP
LIN2
11 A (*1)
11 E (*2)
8 C
8 F
3 C
3 F
24 C (*1)
24 F (*2)
BR
(BAT)
10A
STOP
(BAT)
7. 5A
IMMOBI
40 3C
9 3B
4 3B
W
2
1
A27
Stop Light
Switch Assembly
L
2
1
LG
(RHD *3)
LG
(RHD *4)
2 A (*9)
13 C (*10)
A50(A), A56(C)
Junction
Connector
1 A (*9)
12 C (*10)
A55
Junction Connector
2
1
L
(RHD *3)
L
(RHD *4)
LG
(LHD)
1 AD2
Y
64
D68
Junction
Connector
84
LG
(RHD)
P
(LHD)
W-B
W-B
W-B
W-B
1 B
6 B
D70(B)
Junction
Connector
5 B
2 B
7 B
W-B
W-B
58
D68
Junction
Connector
87
W-B
8
D30
ID Code Box
GND
+B
EFII
EFIO
LIN 1
1
5
6
3
P
(LHD)
LG
(RHD)
GR
(LHD)
LG
(RHD)
G
(LHD)
LG
(RHD)
8 AD4
9 AD4
W-L
G-B
R
(LHD)
R
(LHD)
LG
(RHD)
LG
(RHD)
GR
BR
1
3
4
GND
IGE
SLP1
M
IG2
LIN
B
6
5
7
D33
Steering Lock
Actuator Assembly
L
G
P
(BAT)
20A
STRG
LOCK
2
1
GR
4 AD2
P
100
99
89
90
D68
Junction
Connector
R
(LHD)
LG
(RHD)
L
(IG)
10A
IG2
2
10 1D (*1)
1 1D (*2)
A55
Junction
Connector
12
L-W
(*3)
14
L-B
(*3)
L-B
(*4)
17 3B
24 3C
38 3C
L
V
V
L
BR
BR
BR
BR
W
W
W
W
P
P
P
P
R
R
R
R
W
W
W
W
W-L
G-B
D1

* 1 : Gasoline
* 2 : Diesel
* 3 : w/ Stop & Start System
* 4 : w/o Stop & Start System

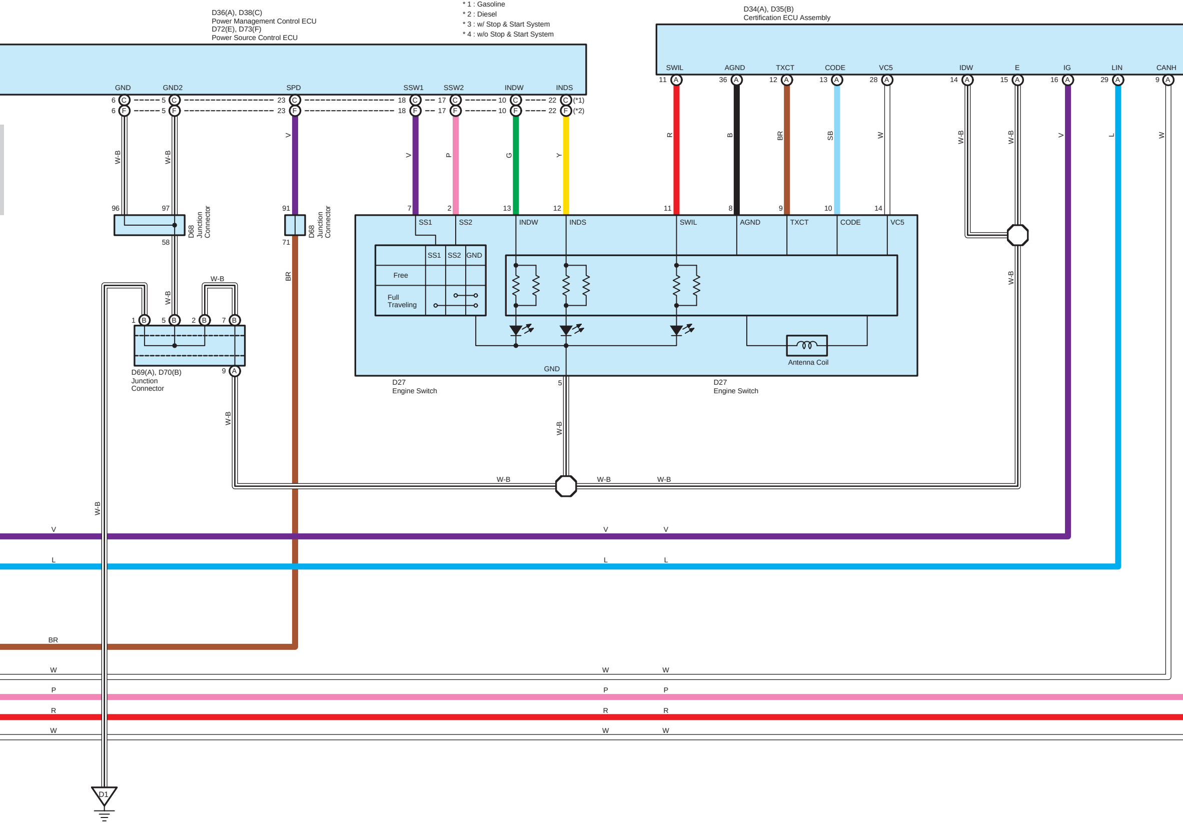
D36(A), D38(C)
Power Management Control ECU
D72(E), D73(F)
Power Source Control ECU
GND
GND2
SPD
SSW1
SSW2
INDW
INDS
(*1)
(*2)
D34(A), D35(B)
Certification ECU Assembly
SWIL
AGND
TXCT
CODE
VC5
IDW
E
IG
LIN
CANH
W-B
V
P
G
Y
R
B
BR
SB
W
L
D68
Junction
Connector
SS1
SS2
Free
Full
Traveling
Antenna Coil
D27
Engine Switch
D69(A), D70(B)
Junction
Connector
D1

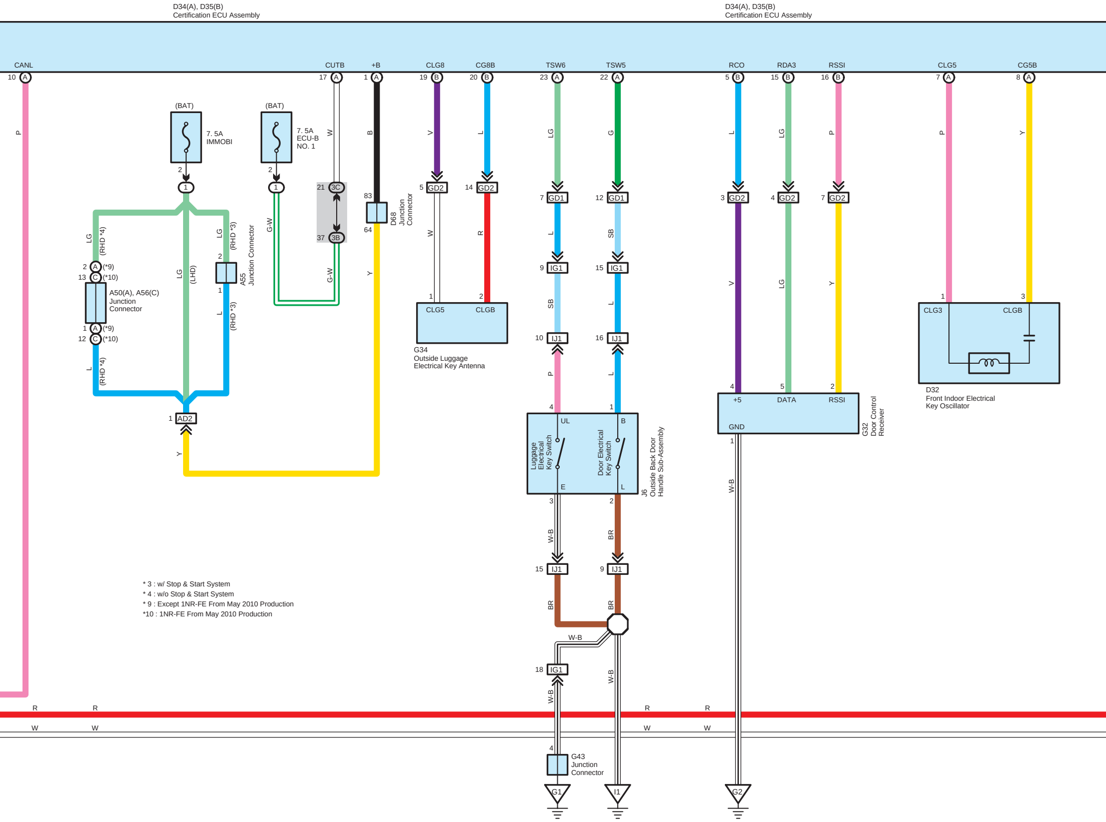
D34(A), D35(B)
Certification ECU Assembly
D34(A), D35(B)
Certification ECU Assembly
CANL
10 A
P
CUTB
17 A
W
+B
1 A
B
CLG8
19 B
V
CG8B
20 B
L
TSW6
23 A
LG
TSW5
22 A
G
RCO
5 B
L
RDA3
15 B
LG
RSSI
16 B
P
CLG5
7 A
P
CG5B
8 A
Y
(BAT)
7. 5A
IMMOBI
2
1
(BAT)
7. 5A
ECU-B
NO. 1
2
1
21 3C
37 3B
G-W
G-W
83
64
D68
Junction
Connector
Y
5 GD2
14 GD2
W
R
1
2
CLG5
CLGB
G34
Outside Luggage
Electrical Key Antenna
7 GD1
12 GD1
L
SB
9 IG1
15 IG1
SB
L
10 IJ1
16 IJ1
P
L
4
1
UL
B
Luggage
Electrical
Key Switch
Door Electrical
Key Switch
E
L
J6
Outside Back Door
Handle Sub-Assembly
3
2
W-B
BR
15 IJ1
9 IJ1
BR
BR
W-B
18 IG1
W-B
W-B
4
G43
Junction
Connector
G1
I1
3 GD2
4 GD2
7 GD2
V
LG
Y
4
5
2
+5
DATA
RSSI
GND
G32
Door Control
Receiver
1
W-B
G2
1
3
CLG3
CLGB
D32
Front Indoor Electrical
Key Oscillator
LG
(RHD *4)
LG
(RHD *3)
2
2 A (*9)
13 C (*10)
A50(A), A56(C)
Junction
Connector
1 A (*9)
12 C (*10)
L
(RHD *4)
LG
(LHD)
1
L
(RHD *3)
A55
Junction Connector
1 AD2
Y
R
R
R
R
W
W
W
W

* 3 : w/ Stop & Start System
* 4 : w/o Stop & Start System
* 9 : Except 1NR-FE From May 2010 Production
*10 : 1NR-FE From May 2010 Production

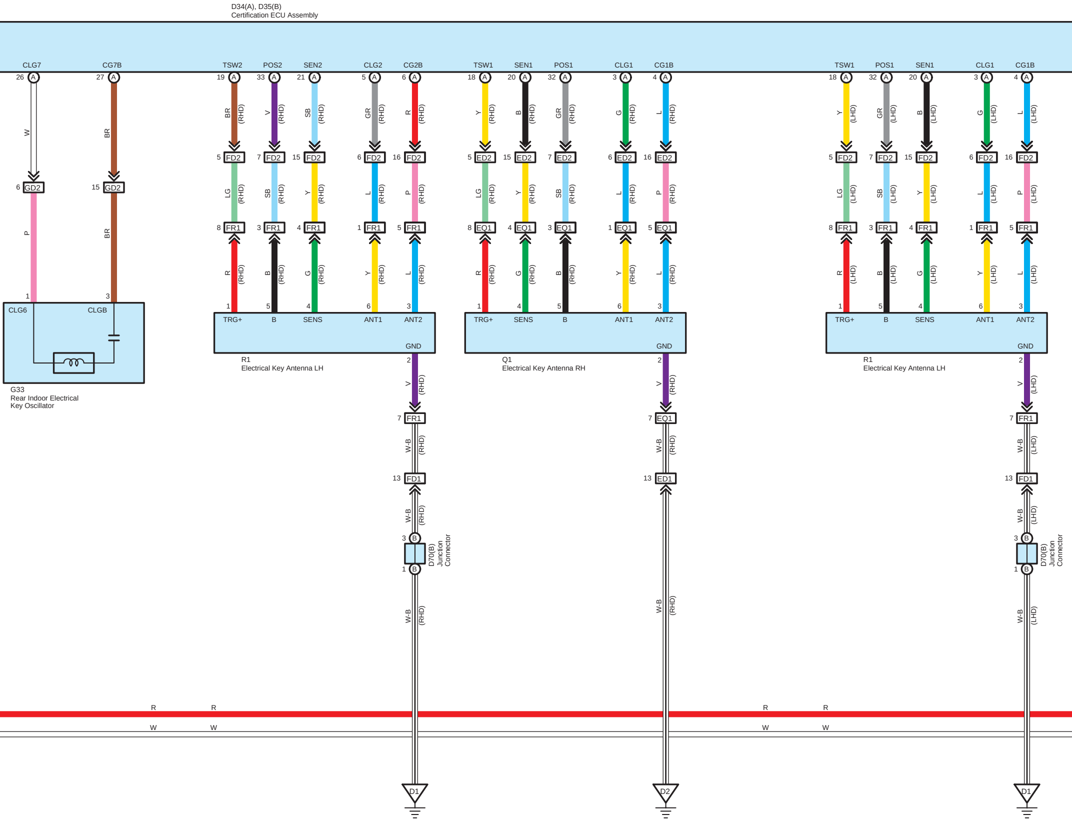
D34(A), D35(B)
Certification ECU Assembly
CLG7 26 A W 6 GD2 P 1
CG7B 27 A BR 15 GD2 BR 3
CLG6
CLGB
G33
Rear Indoor Electrical
Key Oscillator
TSW2 19 A BR (RHD) 5 FD2 LG (RHD) 8 FR1 R (RHD) 1 TRG+
POS2 33 A V (RHD) 7 FD2 SB (RHD) 3 FR1 B (RHD) 5 B
SEN2 21 A SB (RHD) 15 FD2 Y (RHD) 4 FR1 G (RHD) 4 SENS
CLG2 5 A GR (RHD) 6 FD2 L (RHD) 1 FR1 Y (RHD) 6 ANT1
CG2B 6 A R (RHD) 16 FD2 P (RHD) 5 FR1 L (RHD) 3 ANT2
GND 2 V (RHD) 7 FR1 W-B (RHD) 13 FD1 W-B (RHD) 3 B D70(B) Junction Connector 1 B W-B (RHD) D1
R1
Electrical Key Antenna LH
TSW1 18 A Y (RHD) 5 ED2 LG (RHD) 8 EQ1 R (RHD) 1 TRG+
SEN1 20 A B (RHD) 15 ED2 Y (RHD) 4 EQ1 G (RHD) 4 SENS
POS1 32 A GR (RHD) 7 ED2 SB (RHD) 3 EQ1 B (RHD) 5 B
CLG1 3 A G (RHD) 6 ED2 L (RHD) 1 EQ1 Y (RHD) 6 ANT1
CG1B 4 A L (RHD) 16 ED2 P (RHD) 5 EQ1 L (RHD) 3 ANT2
GND 2 V (RHD) 7 EQ1 W-B (RHD) 13 ED1 W-B (RHD) D2
Q1
Electrical Key Antenna RH
TSW1 18 A Y (LHD) 5 FD2 LG (LHD) 8 FR1 R (LHD) 1 TRG+
POS1 32 A GR (LHD) 7 FD2 SB (LHD) 3 FR1 B (LHD) 5 B
SEN1 20 A B (LHD) 15 FD2 Y (LHD) 4 FR1 G (LHD) 4 SENS
CLG1 3 A G (LHD) 6 FD2 L (LHD) 1 FR1 Y (LHD) 6 ANT1
CG1B 4 A L (LHD) 16 FD2 P (LHD) 5 FR1 L (LHD) 3 ANT2
GND 2 V (LHD) 7 FR1 W-B (LHD) 13 FD1 W-B (LHD) 3 B D70(B) Junction Connector 1 B W-B (LHD) D1
R1
Electrical Key Antenna LH
R R R R
W W W W

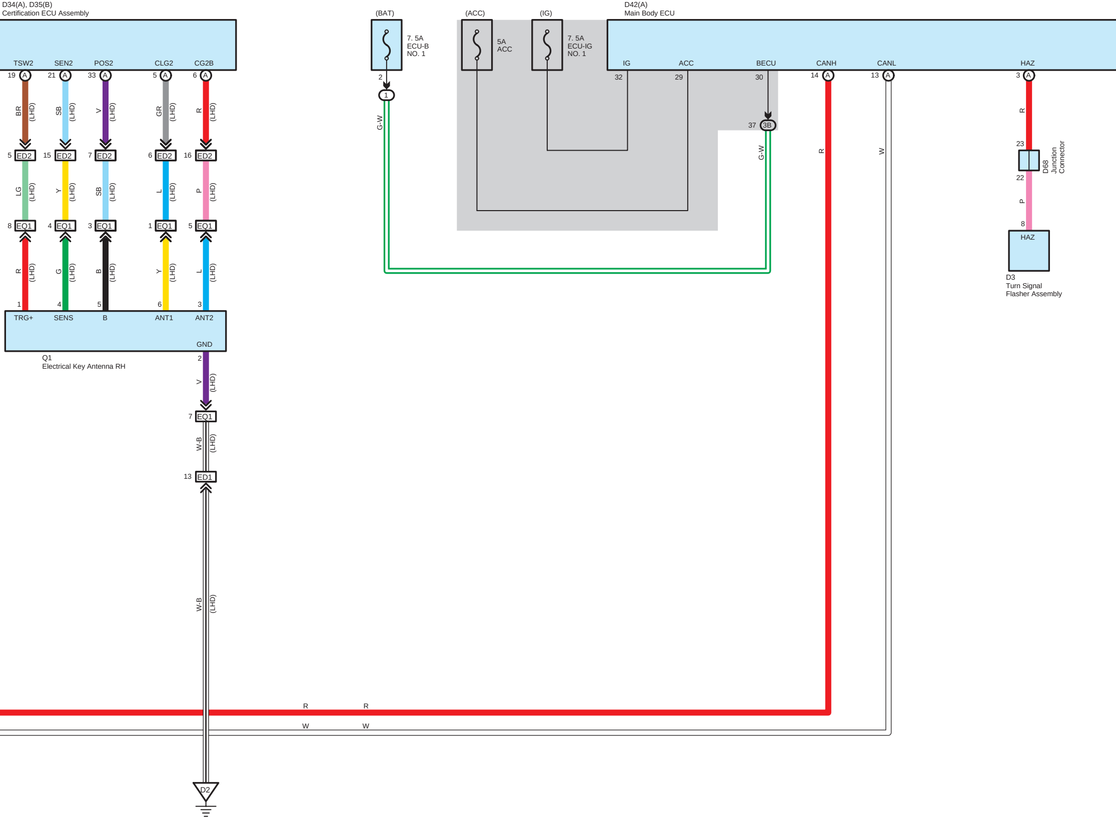
D34(A), D35(B)
Certification ECU Assembly
TSW2
SEN2
POS2
CLG2
CG2B
19 A
21 A
33 A
5 A
6 A
BR (LHD)
SB (LHD)
V (LHD)
GR (LHD)
R (LHD)
5 ED2
15 ED2
7 ED2
6 ED2
16 ED2
LG (LHD)
Y (LHD)
SB (LHD)
L (LHD)
P (LHD)
8 EQ1
4 EQ1
3 EQ1
1 EQ1
5 EQ1
R (LHD)
G (LHD)
B (LHD)
Y (LHD)
L (LHD)
1
4
5
6
3
TRG+
SENS
B
ANT1
ANT2
GND
Q1
Electrical Key Antenna RH
2
V (LHD)
7 EQ1
W-B (LHD)
13 ED1
W-B (LHD)
D2
(BAT)
7. 5A
ECU-B
NO. 1
2
1
G-W
(ACC)
5A
ACC
(IG)
7. 5A
ECU-IG
NO. 1
D42(A)
Main Body ECU
IG
ACC
BECU
CANH
CANL
HAZ
32
29
30
14 A
13 A
3 A
37 3B
G-W
R
W
R
23
22
D68
Junction
Connector
P
8
HAZ
D3
Turn Signal
Flasher Assembly
R
R
W
W

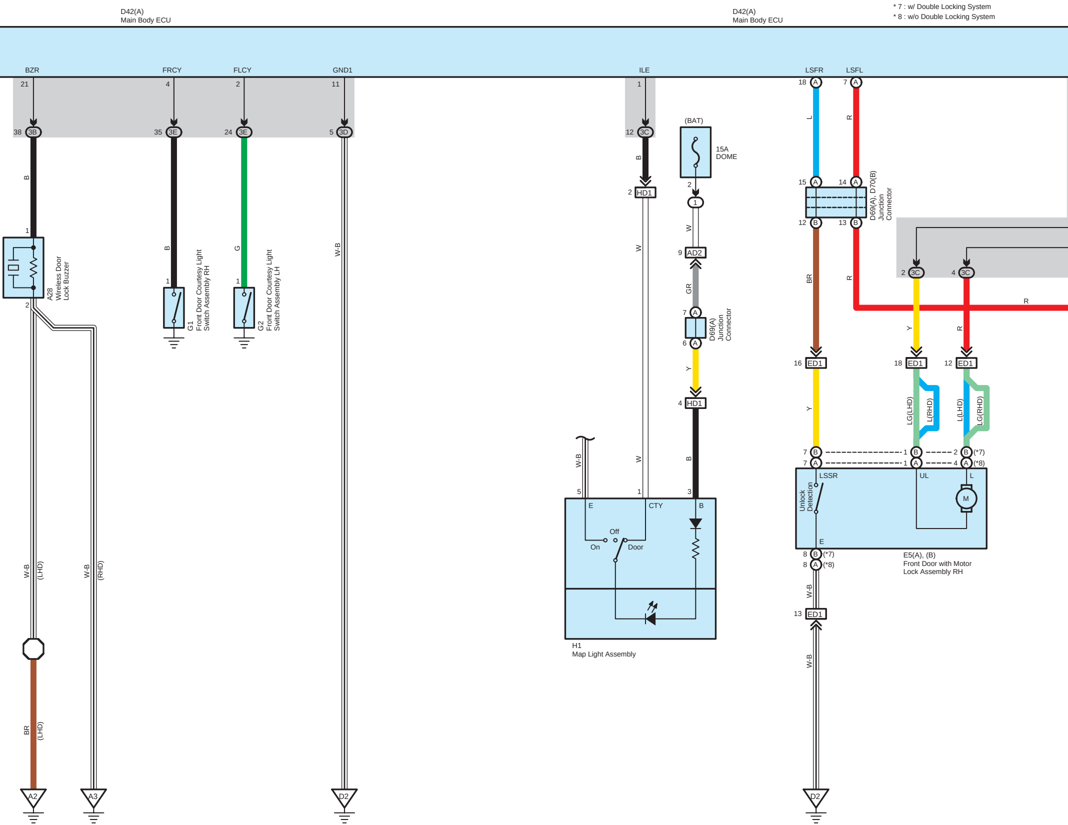
D42(A)
Main Body ECU
D42(A)
Main Body ECU
* 7 : w/ Double Locking System
* 8 : w/o Double Locking System
BZR
FRCY
FLCY
GND1
ILE
LSFR
LSFL
21
4
2
11
1
18 A
7 A
38 3B
35 3E
24 3E
5 3D
12 3C
B
B
G
W-B
L
R
(BAT)
15A
DOME
2
1
W
9 AD2
GR
7 A
6 A
D69(A)
Junction
Connector
Y
4 HD1
B
2 HD1
W
W
15 A
14 A
12 B
13 B
D69(A), D70(B)
Junction
Connector
BR
R
2 3C
4 3C
R
Y
R
16 ED1
18 ED1
12 ED1
Y
LG(LHD)
L(RHD)
L(LHD)
LG(RHD)
7 B
7 A
1 B
1 A
2 B (*7)
4 A (*8)
LSSR
UL
L
Unlock
Detection
M
E
8 B (*7)
8 A (*8)
E5(A), (B)
Front Door with Motor
Lock Assembly RH
W-B
13 ED1
W-B
D2
1
A28
Wireless Door
Lock Buzzer
2
1
G1
Front Door Courtesy Light
Switch Assembly RH
1
G2
Front Door Courtesy Light
Switch Assembly LH
W-B
5
1
3
E
CTY
B
Off
On
Door
H1
Map Light Assembly
W-B
(LHD)
W-B
(RHD)
BR
(LHD)
A2
A3
D2

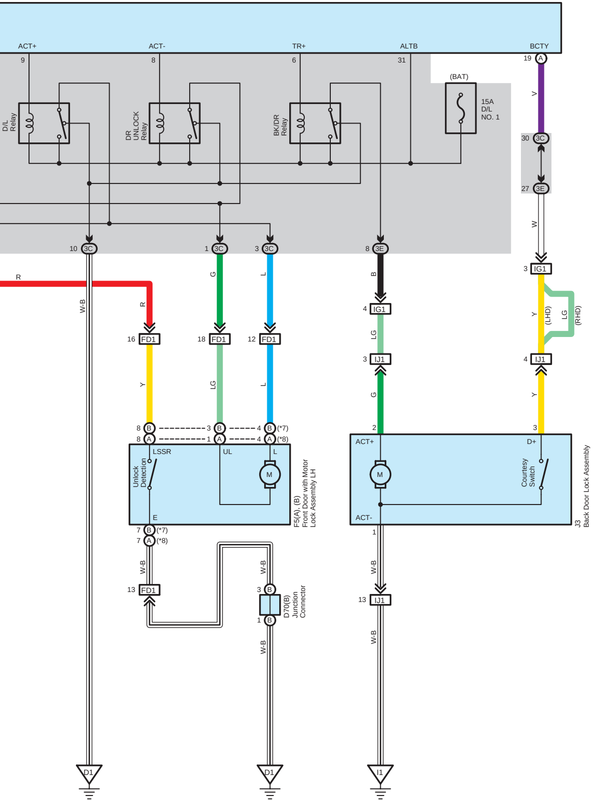
D42(A)
Main Body ECU
ACT+
ACT-
TR+
ALTB
BCTY
9
8
6
31
19
A
D/L
Relay
DR
UNLOCK
Relay
BK/DR
Relay
(BAT)
15A
D/L
NO. 1
V
30
3C
27
3E
W
10
3C
1
3C
3
3C
8
3E
R
W-B
R
G
L
B
3
IG1
Y
(LHD)
LG
(RHD)
4
IG1
LG
3
IJ1
G
4
IJ1
Y
16
FD1
18
FD1
12
FD1
Y
LG
L
8 B
8 A
3 B
1 A
4 B (*7)
4 A (*8)
LSSR
UL
L
Unlock
Detection
M
E
F5(A), (B)
Front Door with Motor
Lock Assembly LH
2
3
ACT+
D+
M
Courtesy
Switch
ACT-
J3
Back Door Lock Assembly
7 B (*7)
7 A (*8)
W-B
13
FD1
W-B
3 B
D70(B)
Junction
Connector
1 B
W-B
1
W-B
13
IJ1
W-B
D1
D1
I1

* 7 : w/ Double Locking System
* 8 : w/o Double Locking System